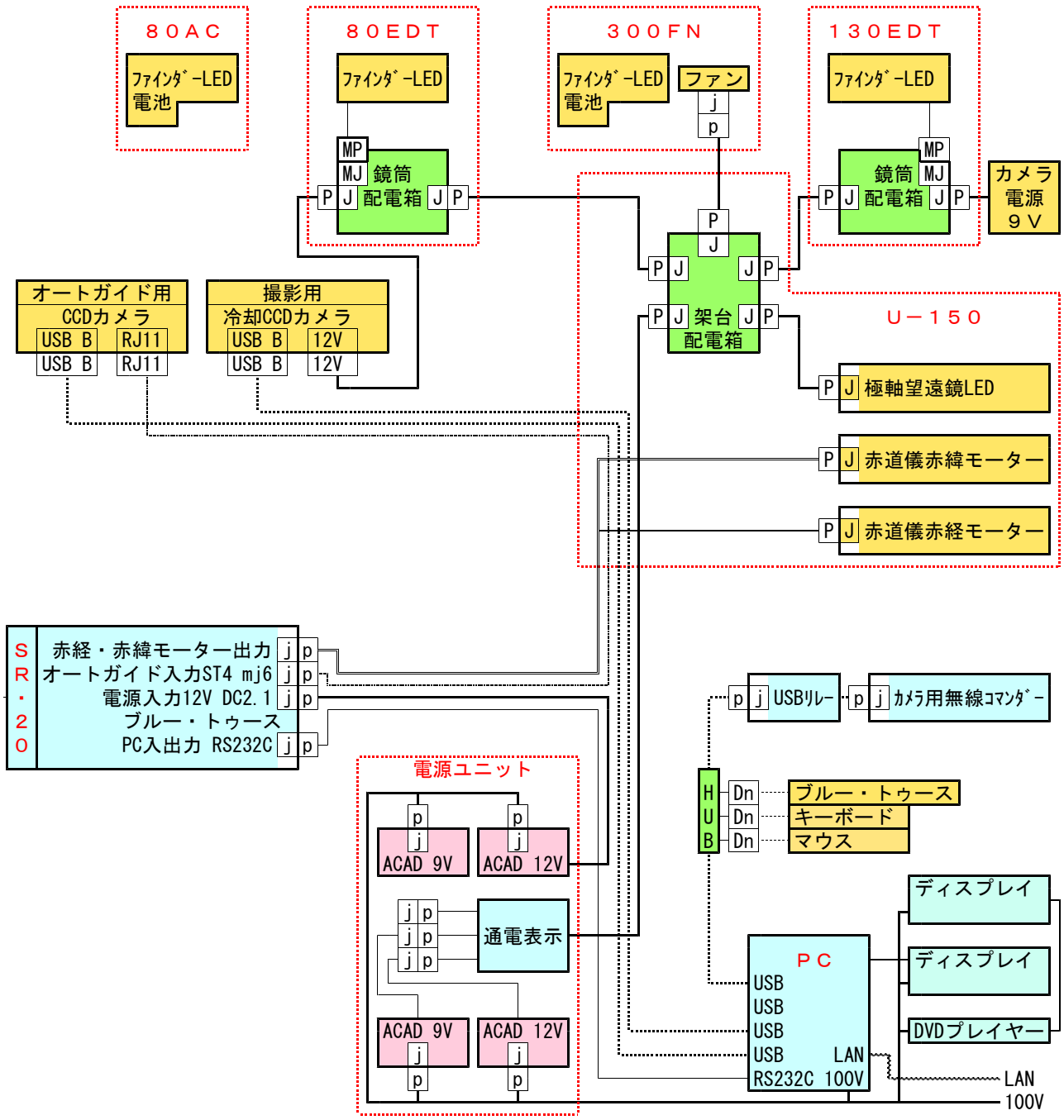Ｕ－１５０電装　２０１６／０４／０２